DRAWING MADE IN AMERICAN PROJECTION

NUMBER C-160296-E

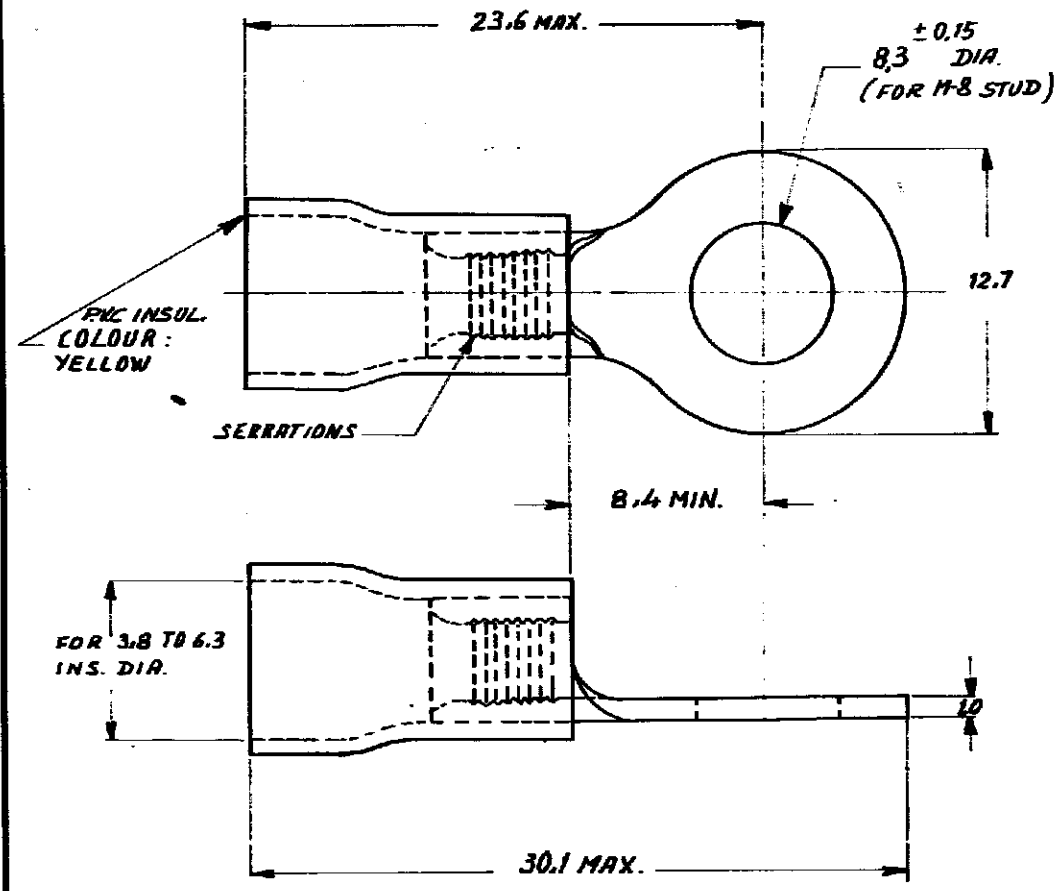

DIMENSIONS IN M.M. DO NOT SCALE PRINT

2-160296-1	160296-0	TAPE MOUNTED
160296	COPPER	TINPLATED
ORDER NO.	MATERIAL	PLATING

DR A. CORPIANI 24/1-69 DATE | DE DATE
CHK DATE | APP 23/1-1969 DATE

CUSTOMER COPY FOR REFERENCE ONLY

©1969 BY AMP-HOLLAND N.V. ALL RIGHTS RESERVED A-MP PRODUCTS COVERED BY PATENTS AND/OR PATENTS PENDING.

AMP-HOLLAND N.V.
'S-HERTOGENBOSCH
HOLLAND

WIRE-RANGE	INSUL.-RANGE	FIRST USED
2.7-5.5 mm²		

SCALE	LOC	SIZE	NO	REV
	H	A	C-160296-E	A

NAME RINGTONGUE TYPE PLASTI-GRIP.

AMP 1252